XGs PON Terminal

X67S

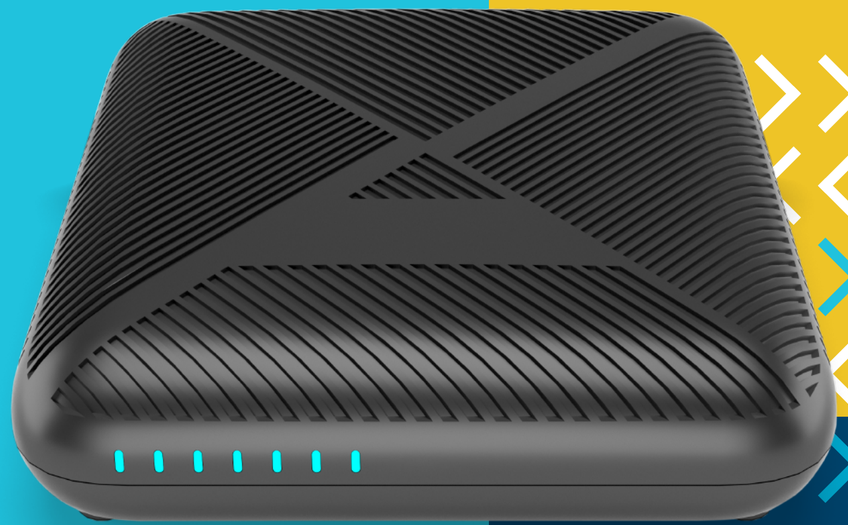

Gigabit Port | Fiber Access | Qos | VoIP

Access to Fiber Optical Network

Support downstream 10Gbps and upstream to 10Gbps with transmission distance up to 20km. Higher bandwidth support makes it possible to integrate and provide more additional services.

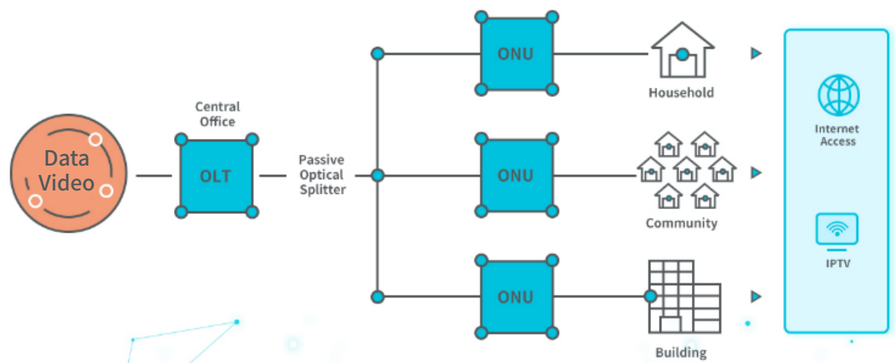

Easy Remote Management

X67S support the ONT Management and Contol Interface (OMCI), making it easy to confiqure, activate and manage remotely from an Optical Line Terminal(OLT).

Fiber access and gigabit port provide incredibly fast transfer speeds

X67S is a next-generation Gigabit Passive Optical Network (GPON) router, ideal for Fiber to The Home solution. It' s an incredibly robust device allowing users to access high-speed internet connections via its GPON port and share it with a X Gigabit Ethernet port.

Specifications

General

- GPON Standards: ITU-T G.984
- Distance: 20Km Max
- Data Rates: Upstream: 10Gbps, Downstream: 10Gbps

Hardware

- Interfaces: 1 x SC/APC GPON Port, 1 x GE Port, 1 x 10GE Port, 1 POTS Port
- Buttons: Power ON/OFF Button, Reset Button
- Power Supply: DC 12V 1A
- Dimensions (W X D X H): 90*73*25.2mm

Software Features

- Quality of Service: WMM, Bandwidth Control
- Port Forwarding: L2/L3 forwarding, L3 NAPT
- VPN: 802.1Q tag VLAN, VLAN transparent mode/VLAN translation mode/VLAN trunk mode
- Access Control: Local Management Control, Host List, Access Schedule, Rule Management
- Firewall Security:
  DoS, SPI Firewall
  IP Address Filter/MAC Address Filter/Domain Filter
  IP and MAC Address Binding
- Management: Access Control, Local Management, Remote Management

Environment

- Operating Temperature: 0°C~40°C (32°F~104°F)
- Storage Temperature: -40°C~70°C (-40°F~158°F)
- Relative Humidity: 10%~90%, non-condensing
- Storage Humidity: 5%~95%, non-condensing

Package Contents

- 1 x X GS PON
- 1 x Power Adapter
- 1 x RJ11 Cable

Certifications
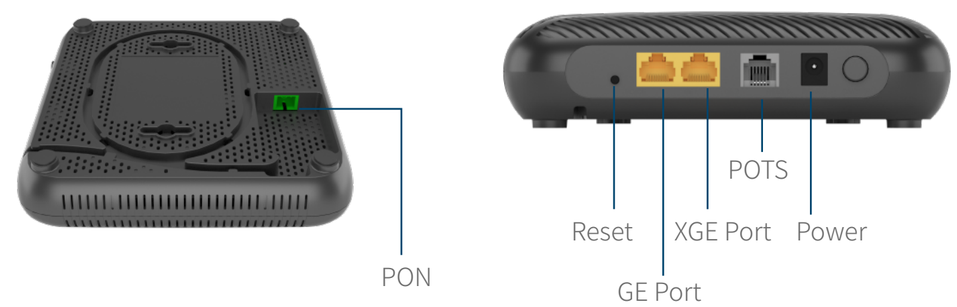
- CE, RoHS